Ames

NATIONAL AERONAUTICS AND SPACE ADMINISTRATION
WASHINGTON, D.C. 20546

November 19, 1970

REPLY TO
ATTN OF: GP

TO: USI/Scientific & Technical Information Division
Attention: Miss Winnie M. Morgan

FROM: GP/Office of Assistant General Counsel for
Patent Matters

SUBJECT: Announcement of NASA-Owned U. S. Patents in STAR

In accordance with the procedures agreed upon by Code GP and Code USI, the attached NASA-owned U. S. Patent is being forwarded for abstracting and announcement in NASA STAR.

The following information is provided:

U. S. Patent No. : 3,532,880

Government or
Corporate Employee : U.S. Government

Supplementary Corporate
Source (if applicable) : NA.

NASA Patent Case No. : XAC-05506-1

NOTE - If this patent covers an invention made by a corporate employee of a NASA Contractor, the following is applicable:

Yes ☐ No ☒

Pursuant to Section 305(a) of the National Aeronautics and Space Act, the name of the Administrator of NASA appears on the first page of the patent; however, the name of the actual inventor (author) appears at the heading of Column No. 1 of the Specification, following the words ". . . with respect to an invention of . . ."

Elizabeth A. Carter

Enclosure
Copy of Patent cited above

FACILITY FORM 602

N71-16095 (ACCESSION NUMBER) (THRU) 00
(PAGES) (CODE)
(NASA CR OR TMX OR AD NUMBER) 24 (CATEGORY)

N71-16095

Oct. 6, 1970 J. DIMEFF 3,532,880

ELECTROSTATIC CHARGED PARTICLE ANALYZER HAVING DEFLECTION MEMBERS SHAPED ACCORDING TO THE PERIODIC VOLTAGE APPLIED THERETO

Filed Jan. 30, 1968 2 Sheets-Sheet 1

FIG. 1

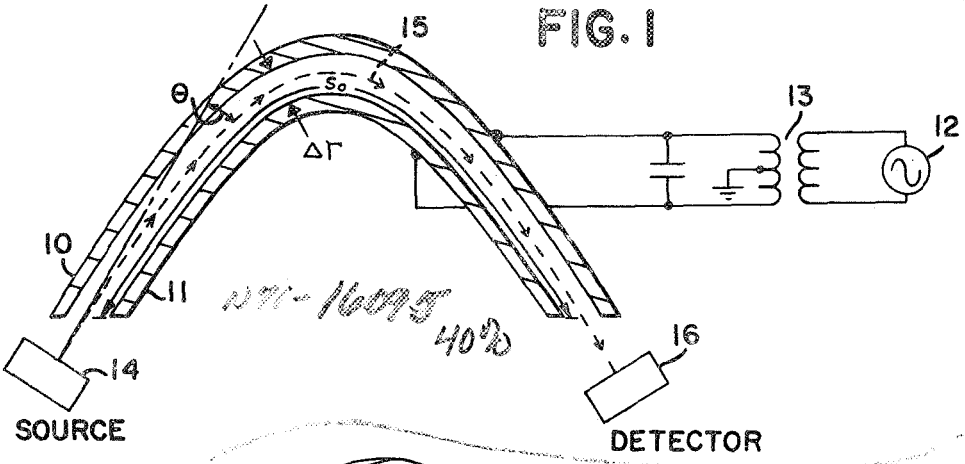

N71-16095 40%

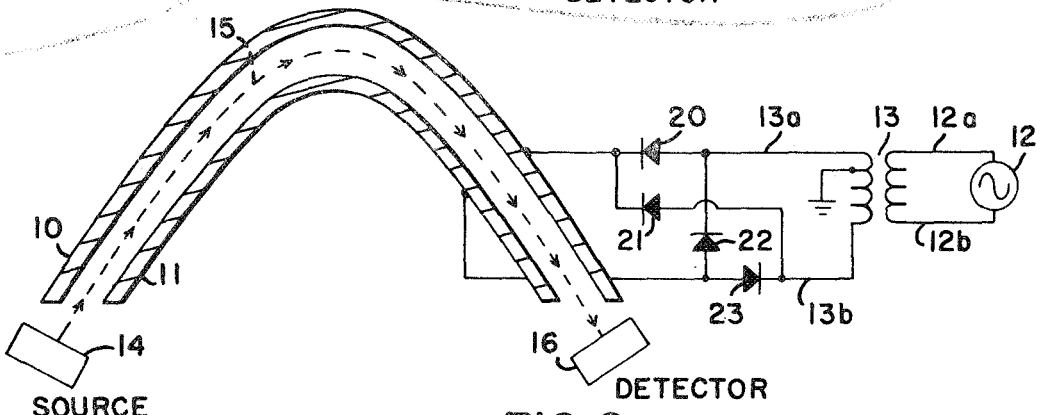

FIG. 2

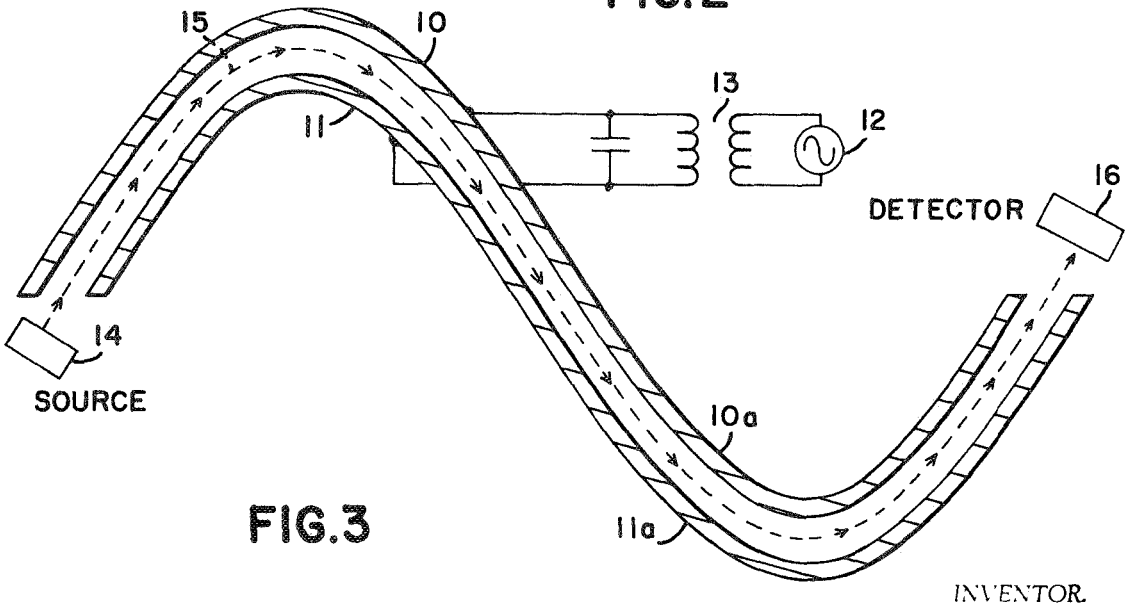

FIG. 3

INVENTOR.
JOHN DIMEFF

BY [signature]

[signature]
ATTORNEY

076

FIG. 4

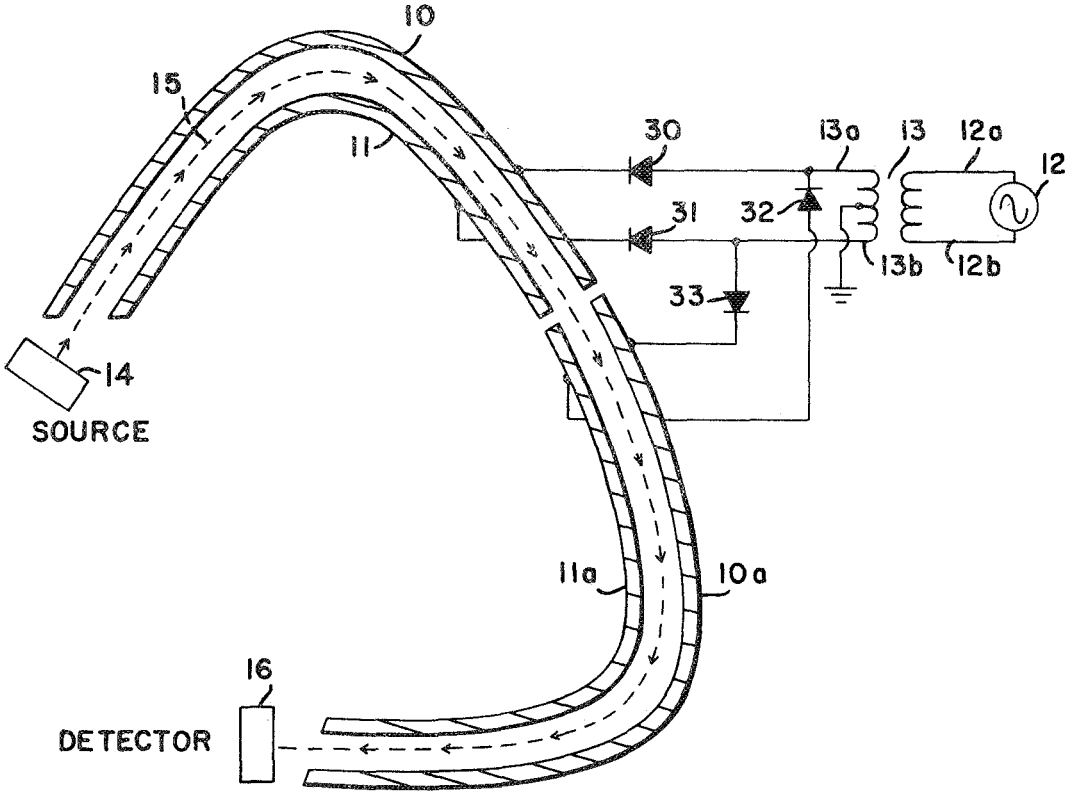

FIG. 5

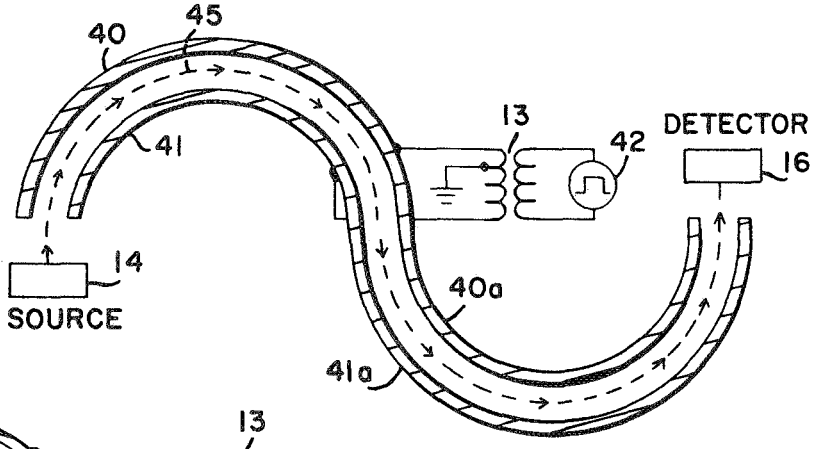

FIG. 6

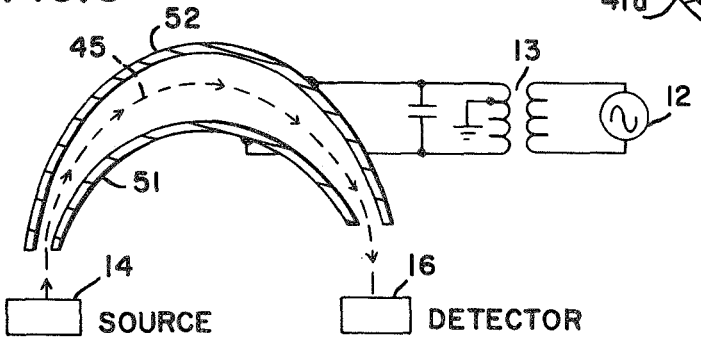

INVENTOR.
JOHN DIMEFF
BY
G. H. McCoy
Darrell G. Brubbe
ATTORNEY

United States Patent Office 3,532,880 Patented Oct. 6, 1970

3,532,880

ELECTROSTATIC CHARGED PARTICLE ANALYZER HAVING DEFLECTION MEMBERS SHAPED ACCORDING TO THE PERIODIC VOLTAGE APPLIED THERETO

John Dimeff, San Jose, Calif., assignor to the United States of America as represented by the Administrator of the National Aeronautics and Space Administration

Filed Jan. 30, 1968, Ser. No. 701,732
Int. Cl. H01j 39/34
U.S. Cl. 250—41.9 8 Claims

ABSTRACT OF THE DISCLOSURE

A charged particle analyzer in which a periodically varying voltage is applied across electrostatic deflection members. The deflection members have opposed surfaces defining a passageway for charged particles to be analyzed and these surfaces are shaped for establishing the direction of the electric field in the passageway perpendicular to the trajectory of the particles throughout the entire length of the passageway. Under these conditions, only those particles simultaneously characterized by a given velocity and a given energy-to-charge ratio can pass through the deflection members without interception.

The invention described herein was made by an employee of the United States Government and may be manufactured and used by or for the Government for Governmental purposes without the payment of any royalties thereon or therefor.

BACKGROUND OF THE INVENTION

The present invention relates in general to the analysis of charged particles, and more particularly to a charged particle analyzer which permits simultaneous measurement of both the energy-to-charge ratio of the particles and the velocity of the particles.

In most presently-used forms of charged particle analyzers, such as plasma analyzers, mass spectrometers, and the like, the charged particles pass through one or more separators which deflect, intercept or bunch the particles by means of either an electrostatic or an electromagnetic force. Each separator is differentially sensitive to some combination of the mass, charge, and velocity of the charged particles and acts as a filter, allowing only those particles within a certain spectral window to impinge on a collecting plate at the exit of the filter. By using various combinations of such filters, it is, in principle, possible to analyze the particles on the basis of energy-to-charge (or momentum-to-charge) ratio and velocity as independent variables. Examples of such prior art analyzers include those in which:

(1) Particles are passed through a narrowly constrained region wherein they are acted upon by an electrostatic force steadily applied normal to the direction of motion of the particles and typically derived from a differential voltage applied between two closely spaced segments of concentric cylinders or spheres;

(2) Particles are passed through a substantially unconstrained space wherein their motions are influenced by a periodic, typically radio frequency, field applied by electrostatic means;

(3) Particles are passed through a substantially unconstrained space wherein their motions are influenced by a magnetic field steadily applied in a direction normal to the direction of motion of the particles;

(4) Particles are permitted to drift through a field-free drift region for a given period of time (time of flight); and

(5) Particles are passed in sequence through an electrostatic field and an electromagnetic field.

These prior art devices are characterized by certain undesired limitations, including: inadequate definition of the particle characteristics; requirements for large voltages to produce adequate electrostatic forces; requirements for heavy magnets; poor resolution; requirements for high voltage, short duration pulses, and accurate timing devices; and fringing of the deflecting fields which introduce unwanted lens effects.

It is the principal object of the present invention to overcome one or more of these and other limitations of prior art analyzers.

SUMMARY OF THE INVENTION

In accordance with the present invention, a given periodically-varying voltage waveform is applied between electrostatic deflection members, with the shape of said deflection members being chosen so that only those particles simultaneously characterized by a given velocity and a given energy-to-charge ratio can pass through said deflection members.

DESCRIPTION OF DRAWING

The various features and advantages of the invention will become more apparent upon a consideration of the following description, taken in connection with the accompanying drawing, wherein the same reference numeral is used for the same or similar element in the various figures and:

FIG. 1 is a partially-schematic cross-sectional view of a particle analyzer in accordance with the present invention;

FIG. 2 is a partially-schematic cross-sectional view of a modified particle analyzer in accordance with the present invention which permits more frequent detection of particles;

FIG. 3 is a partially-schematic cross-sectional view of a modified particle analyzer in accordance with the present invention having multiple sections;

FIG. 4 is a partially-schematic cross-sectional view of another modified particle analyzer in accordance with the present invention having multiple sections;

FIG. 5 is a partially-schematic cross-sectional view of a modified particle analyzer in accordance with the present invention in which the particle trajectories are circular; and

FIG. 6 is a partailly-schematic cross-sectional view of another modified particle analyzer in accordance with the present invention in which the particle trajectories are circular.

DESCRIPTION OF THE PREFERRED EMBODIMENTS

The present invention is based on the concept that charged particle analysis may be achieved by shaping electrostatic deflection members in accordance with the time-dependent action of a periodic waveform applied to said members. Consider, for example, a simple sinusoidal voltage applied differentially between two conducting plates, said plates being machined with that particular curvature such that when the sinusoidal voltage is impressed thereon, the accelerating electrostatic field always acts perpendicular to the direction of particle motion. From the physical laws describing the motion of a charged particle acting under these constraints, said particle will follow a trajectory such that the angle θ between a local

segment of the trajectory and the initial direction of entry into the analyzer is given by the function:

(1) $$\theta=\frac{Kv}{\omega}\sin\left(\frac{\omega s}{v}\right)$$

where:

$$K=\frac{q\Delta E}{mv^2\Delta r}$$

m is the particle velocity,
q is the particle charge,
Δr is the separation between the plates.
ΔE is the peak amplitude of the periodically-varying voltage between the plates,
ω is the angular frequency at which the voltage between the plates varies, and
s is the arc length along with particle trajectory between the plates.

With the deflection plates shaped to conform with Equation 1 for a particular value of K and a particular valve of ω/v, the energy-to-charge ratio ϵ/q of the particles which pass through the passageway between the plates without interception is:

2) $$\frac{\epsilon}{q}=K\frac{\Delta E}{2\Delta r}$$

and the velocity of the particles which pass through the plates without interception is:

(3) $$v=\frac{S_o\omega}{\pi}$$

where:

S_o is the total arc length moved along the particle trajectory between the plates during one-half cycle of the periodic variation of the voltage between the plates.

It should be noted that particles which enter the passageway between the plates with these particular values of ϵ/q and v remain perpendicular to the electric field lines because of the shape of the plates as derived from Equation 1, and, since there is no motion of these particles along the field lines, these values of ϵ/q and v remain constant throughout the entire trajectory. Further, it is to be noted that the same pair of plates provides the filtering for both ϵ/q and v, and thus performs the combined functions of both an electrostatic ϵ/q analyzer and a time-of-flight (v) analyzer in the same compact space.

Referring now to FIG. 1, there is shown a particle analyzer comprising conducting plates **10** and **11** separated by a constant distance Δr to form a passageway therebetween for changed particles. An alternating voltage source **12** generates a sinusoidal voltage at angular frequency ω which is coupled through a grounded center tap transformer **13** to provide a differential voltage across the plates **10** and **11** which varies at the frequency ω with a peak amplitude ΔE. A source **14** of charged particles, for example, positive ions of a substance being studied, directs the charged particles into the passageway between the plates **10** and **11** at right angles to the electric field lines generated by the voltage ΔE between the plates. The plates **10** and **11** are shaped so as to define a trajectory **15** therebetween which curves in accordance with Equation 1 in an approximately sinusoidal manner. Accordingly, only those particles with valves of ϵ/q and v given by Equations 1 and 2, respectively, pass through the length S_o of the analyzer and are collected by a suitable particle detector **16**. As is evident from these equations, the particle spectrum can be scanned with respect to ϵ/q by varying the peak amplitude ΔE of the generator **12**, and can be scanned with respect to v by varying the angular frequency ω of the generator.

The analyzer of the present invention, as illustrated by the just-described embodiment of FIG. 1, can be seen to have the following advantages:

(1) A high resolution because of the close constraints on the particle trajectory;

(2) Moderate values of voltage required to effect the particle analysis;

(3) Elimination of weight and power requirements associated with magnetic field devices; and

(4) Elimination of stray magnetic fields associated with magnetic separators and stray (fringing) electric fields associated with electrostatic separators.

The embodiment of FIG. 1 is operable only on alternate half cycles of the generator **12**. For example, in the case of positive ions, the desired particle analysis occurs only as to those ions which enter the analyzer at the beginning of the half cycle for which the voltage on plate **11** is negative with respect to the voltage on plate **10**, the selected particles leaving the analyzer at the end of said half cycle after having travelled the distance S_o particles entering the analyzer at other times are intercepted by the plates **10** and **11**.

FIG. 2 shows an embodiment of the invention which permits more frequent detection of particles. An electronic switching network comprising four diode rectifiers **20**, **21**, **22** and **23**, is connected between the transformer **12** and the plates **10** and **11**. When the voltage of the upper line **12***a* of the generator **12** is positive with respect to the lower line **12***b*, a positive voltage appears on the upper transformer line **13***a* and a negative voltage appears on the lower transformer line **13***b*. The positive voltage is passed through the diode **20** to the plate **10**; and the negative voltage is passed through diode **23** to the plate **11**. On the next half-cycle, when the voltage of the upper generator line **12***a* is negative with respect to the lower generator line **12***b*, a negative voltage appears on the upper transformer line **13***a* and a positive voltage appears on the lower transformer line **13***b*. The negative voltage is then passed through the diode **22** to the plate **11**; and the positive voltage is passed through the diode **21** to the plate **10**. Thus, it is seen that the plate **11** remains negative with respect to the plate **12** during both half-cycles of the generator **12** and, accordingly, particles which enter the analyzer at the beginning of each half-cycle are analyzed and passed to the detector **16**.

The detection resolution of a particle analyzer can be enhanced by the addition of multiple sections in series along the particle stream. The analyzer of the present invention is particularly well adapted to such multiplication of analyzer sections, as shown in FIGS. 3 and 4.

In FIG. 3, the deflection plates are formed by adding to the analyzer **10**, **11**, of FIG. 2 a second section **10***a*, **10***b*, which is identical in configuration and is joined tangentially at the end of the section length S_o. In the embodiment of FIG. 3, the curvature of the second section **10***a*, **10***b* is reversed so that the multiple sections continue a generally linear progression of the particle stream from the source **14** to the detector **16**. Consequently, for analysis of positive particles, the polarity of the top plate **10***a* must be negative with respect to the bottom plate **11***a*. Such reversal in polarity is automatically provided in the embodiment of FIG. 3, by having ohmic continuity between plate portions **10** and **10***a* and between plate portions **11** and **11***a*. Under these conditions, those particles which enter the analyzer **10**, **11**, at the beginning of the half-cycle of the generator **12** during which the lower plate portion **11** is negative with respect to the upper plate portion **10** will then enter the analyzer **10***a*, **11***a* at the beginning of the next half-cycle of the generator **12** during which the upper plate portion **10***a* is negative with respect to the lower plate portion **11***b*. It is apparent that several analyzer sections may thus be joined together along the direction of the particle stream. Also, it is apparent that the frequency of detection in the embodiment of FIG. 3 can be increased by providing an electronic switch as is shown in FIG. 2.

In FIG. 4, the multiple-section deflection plates are also formed by adding to the analyzer **10**, **11**, of FIG. 2 a second section **10***a*, **10***b* which is identical in configuration and is joined tangentially at the end of the section length S_o. However, in the embodiment of FIG. 4, the curvature of the second section **10***a*, **10***b*, is continued in the same sense as the first section so that the multiple sections return the particle stream to the detector **16** which is now closer to the source **14**. For analysis of positive particles, it is now required that the plate portion **11***a* remain negative with respect to the plate portion **10***a*. To accomplish this, an electronic switching network comprising four diode rectifiers **30**, **31**, **32** and **33**, is connected between the transformer **12** and the plate portions **10**, **10***a*, **11** and **11***a*, it being noted that in this embodiment plate portion **10** is in ohmic insulation with respect to plate portion **10***a* and plate portion **11** is in ohmic insulation with respect to plate portion **11***a*. When the voltage of the upper generator line **12***a* is positive with respect to the lower generator line **12***b*, a positive appears on the upper transformer line **13***a* and a negative voltage appears on the lower transformer line **13***b*. The positive voltage is then passed through the diode **30** to the plate portion **10**; and the negative voltage is passed through the diode **31** to the plate portion **11**. On the next half-cycle, when the voltage of the upper generator line **12***a* is negative with respect to the lower generator line **12***b*, a negative voltage appears on the upper transformer line **13***a* and a positive voltage appears on the lower transformer line **13***b*. The positive voltage is then passed through the diode **33** to the plate portion **10***a*; and the negative voltage is passed through the diode **32** to the plate portion **11***a*. Thus, those particles which enter the analyzer **10**, **11**, at the beginning of the half-cycle of the generator **12** during which the lower plate portion **11** is negative with respect to the upper plate portion **10** will then enter the analyzer **10***a*, **11***a*, at the beginning of the next half-cycle of the generator **12** during which the plate portion **11***a* is also negative with respect to the plate portion **10***a*. It is apparent that further diodes may be provided as in FIG. 2 so that a second group of particles, entering the first section **10**, **11** at the same time as the first group enters the second section **10***a*, **11***a*, may be analyzed, thereby increasing the frequency of detection in the embodiment of FIG. 4.

For compactness of instrumentation, it may be desirable to constrain the particles in substantially circular trajectories, rather than the approximately sinusoidal trajectories as in FIGS. 1 through 4. Such circular trajectories are provided in the embodiments of FIGS. 5 and 6.

In FIG. 5, there is shown a two section analyzer. The first section has circular plates **40** and **41**, and the second section has circular plates **40***a* and **40***b* of identical configuration. The two sections are joined tangentially and with reversed curvature as in FIG. 3. In the embodiment of FIG. 5, the periodically-varying voltage across the plates is generated by a square wave generator **42**. Solution of the equations of motion shows that the trajectory **45** normal to the lines of force established between the plates **10** and **11** by the square waveform of generator **42** is circular, rather than sinusoidal as in the case of the sinusoidal waveform. Thus, the combination of the square wave generator with the circular deflection plates also results in a selection of a particular group of particles characterized by given values of ϵ/q and v. It is apparent that the embodiment of FIG. 5 can be readily modified to provide several analyzer sections, to provide just a single section as in FIG. 1, to provide increased frequency of detection by means of an electronic switch as in FIG. 2, and to form two sections with a turned-around trajectory as in FIG. 4.

In FIG. 6, the analyzer comprises plates **51** and **52** shaped so that the spacing therebetween, instead of being constant as in FIG. 1, varies sinusoidally along the particle trajectory **45**. The generator **12** provides a sinusoidal waveform to the plates as in FIG. 1. Under these conditions, the trajectory **45** normal to the lines of force established between the sinusoidally spaced plates **51** and **52** by the sinusoidal waveform of the generator **12** is circular. It is apparent that the embodiment of FIG. 6 can readily be modified to provide increased frequency of detection by means of an electronic switch as in FIG. 2, and to provide multiple sections as in FIGS. 3 and 4.

Various other modifications will occur to those skilled in the art. For example: the analyzer may be combined with charge detection apparatus to provide additional information on the properties of the particles; the analyzer may be combined with a conventional analyzer in which a D-C voltage is applied between the plates, with appropriate modification of the plate shape to provide a partial modulation of the particle beam; and other specially-shaped plates may be used for particle trajectories as they would develop under the influence of other voltage waveforms. Moreover, it is apparent that the deflecting members may be thin plates, or they may be opposing parallel surfaces of metal blocks; or they may have shapes formed by the rotation of the plate cross-sections about an axis of symmetry.

It is to be understood that modifications and variations of the embodiments of the invention disclosed herein may be resorted to without departing from the spirit of the invention and scope of the appended claims.

Having thus described my invention, what I claim as new and desire to protect by Letters Patent is:

1. A charged particle analyzer, comprising: means for generating a periodically varying voltage; and a pair of electrostatic deflection members having opposed surfaces defining a passageway for charged particles to be analyzed, said passageway having a shape corresponding to a portion of the shape of said periodically varying voltage, said voltage being applied across said deflection members to establish an electric field therebetween, and said opposed surfaces of said deflection members being shaped for establishing the direction of said electric field perpendicular to the trajectory of said charged particles throughout the entire length of said passageway.

2. A charged particle analyzer according to claim **1** wherein the voltage applied across said deflection members has a sinusoidal waveform with a peak amplitude ΔE and an angular frequency ω, and said opposing surfaces are separated by a constant distance Δr and are shaped in accordance with the relationship:

$$\theta=\frac{Kv}{\omega}\sin\left(\frac{\omega s}{v}\right)$$

where:

θ is the angle between a local segment of the particle trajectory through the passageway between said opposing surfaces, and the initial direction of particle entry into said passageway

$$K=\frac{q\Delta E}{mv^2\Delta r}$$

m is the mass of the particles to be analyzed,
q is the charge on the particles to be analyzed, and
s is the arc length along said passageway,

whereby the analyzed particles passing through said passageway without interception are characterized by an energy-to-charge ratio ϵ/q given by:

$$\frac{\epsilon}{q}=\frac{q\Delta E}{mv^2\Delta r}$$

and a velocity v given by:

$$v=\frac{S_0\omega}{\pi}$$

where S_o is the total arc length moved along said particle trajectory during one-half cycle of the periodic variation of the voltage applied across said deflection members.

3. A charged particle analyzer according to claim 1 further comprising switching means for reversing the voltage applied across said deflection members at the beginning of each half-cycle of said periodically varying voltage, whereby the polarity of the electric field between said deflection members remains the same.

4. A charged particle analyzer according to claim 1 in which said passageway has at least two sections in series along the particle trajectory, the first of said sections containing the electric field which interacts with the same particles during the next half-cycle of said periodically varying voltage, said sections being of substantially the same configuration and being positioned tangentially along said particle trajectory.

5. A charged particle analyzer according to claim 4 wherein said second section is reversed in curvature with respect to said first section and adjacent deflection member portions of the two sections are in ohmic continuity.

6. A charged particle analyzer according to claim 4 wherein said second section continues with the same curvature as said second section and adjacent deflection member portions are in ohmic insulation, and further comprising means for applying a voltage across the deflection member portions of said second section at the beginning of alternate half-cycles of said periodically varying voltage which is of the same polarity as the voltage applied across the deflection member portions of said first section on the preceding half-cycles of said periodically varying voltage.

7. A charged particle analyzer according to claim 1 wherein the voltage applied across said deflection members has a square waveform, and said opposing surfaces are separated by a constant distance and shaped to provide a circular passageway therebetween.

8. A charged particle analyzer according to claim 1 wherein the voltage applied across deflection members has a sinusoidal waveform, and said opposing surfaces are separated by a distance which varies sinusoidally along the length of said particle trajectory, said trajectory being circular in shape.

References Cited

UNITED STATES PATENTS

2,769,910	11/1956	Elings.
3,040,173	6/1962	Higatsberger.
3,061,720	10/1962	Ewald.
3,441,732	4/1969	Gautherin et al.

WILLIAM F. LINDQUIST, Primary Examiner

A. L. BIRCH, Assistant Examiner